ARV CONNECTOR

Wire-to-wire

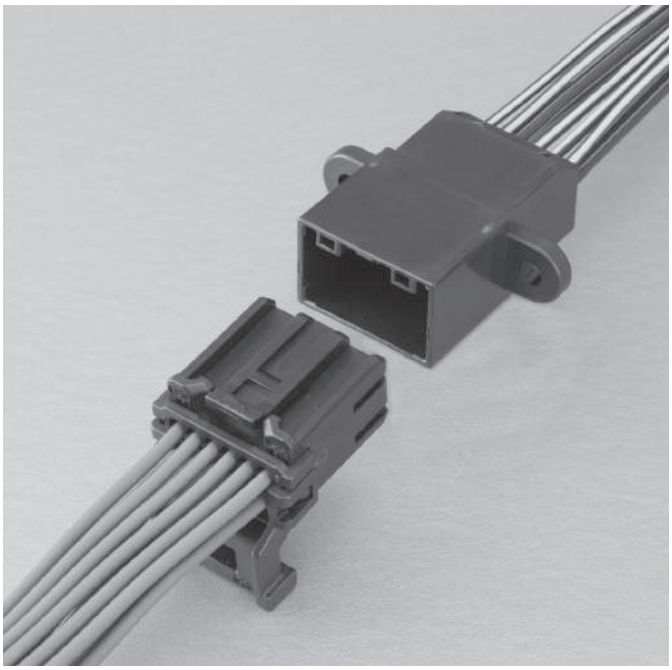

0.64 Unsealed wire-to-wire connection system for unsealed applications, requiring Automotive durability.

■Features

- ●12 Circuits, 18 Circuits and 22 Circuits Wire-to-Wire Connection
- ●Optional Wire Routing Attachment (to optimize packaging space)
- ●Versatile Mounting Options
- ●Latch Overstress Feature
- ●Both Female and Male Connectors utilize Independent Secondary Lock for Terminal retention

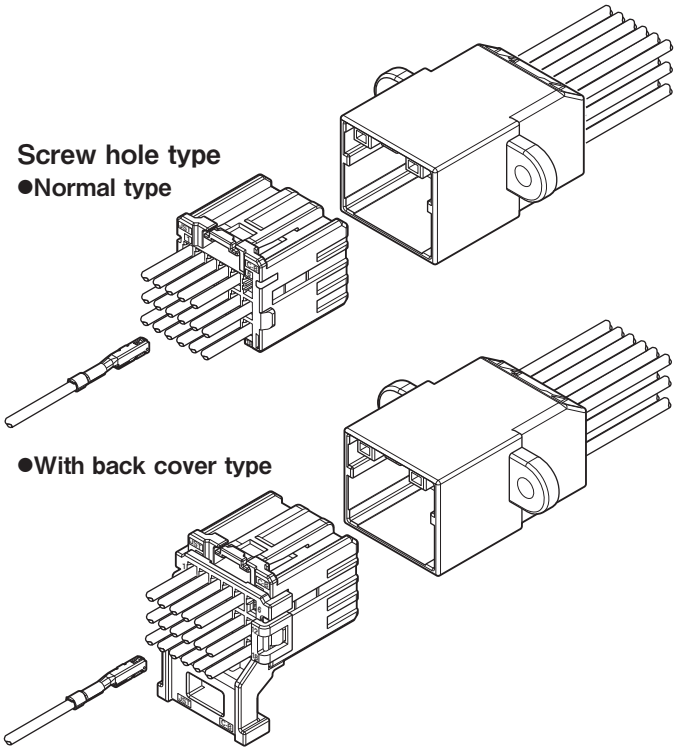

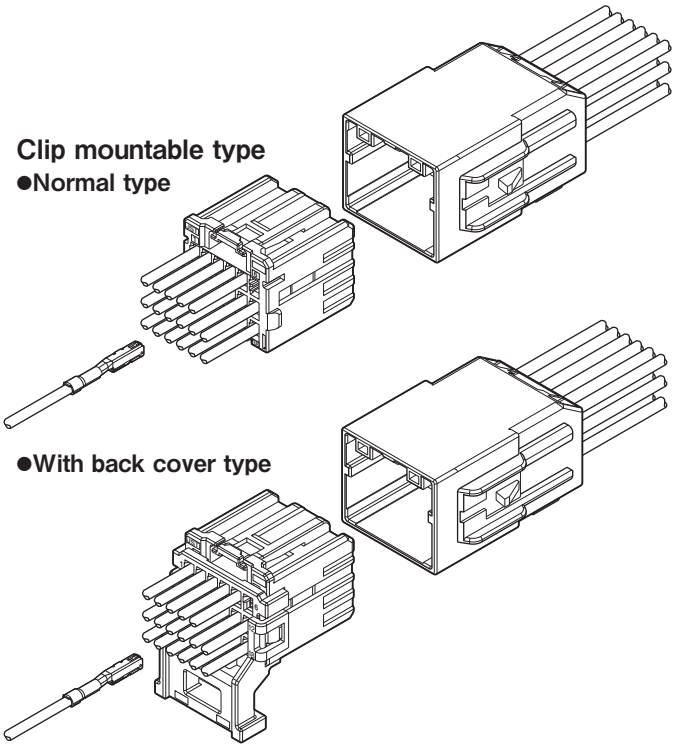

■Specifications

- ●Current rating: 5 A DC max.
- ●Voltage rating: 14 V DC
- ●Temperature range: −40°C to +125°C (including temperature rise in applying electrical current)
- ●Contact resistance: Initial value/ 15 mΩ max.
  After environmental tests/ 15 mΩ max.
- ●Insulation resistance: 100 MΩ min.
- ●Applicable Wire: TXL/ ISO 0.35 mm^2 to 0.75 mm^2
  O.D.≤1.9 mm (AWG #22 to #18)
  (Female Terminal)
  ISO 0.35 mm^2 to 0.5 mm^2
  O.D.≤1.7 mm (AWG #22 to #20)
  (Male Terminal)

* Compliant with ELV/RoHS.
* Contact JST for details.

Female terminal

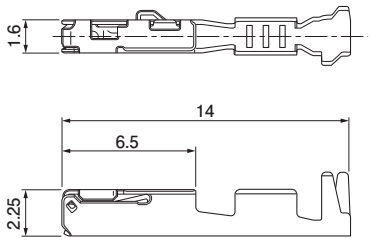

Model No.	Applicable wire range		Q'ty/reel
	Conductor (mm^2)	Insulation O.D. (mm)	
SAIT-A03T-M064	0.35 to 0.5	≤1.9	6,500
SAIT-A02T-M064	0.75	≤1.9	6,500

Material and Finish
Copper alloy, tin-plated (reflow treatment)

Female connector

●12 circuits

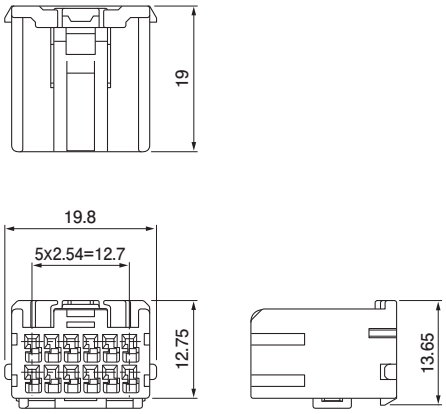

●12 circuits (With back cover)

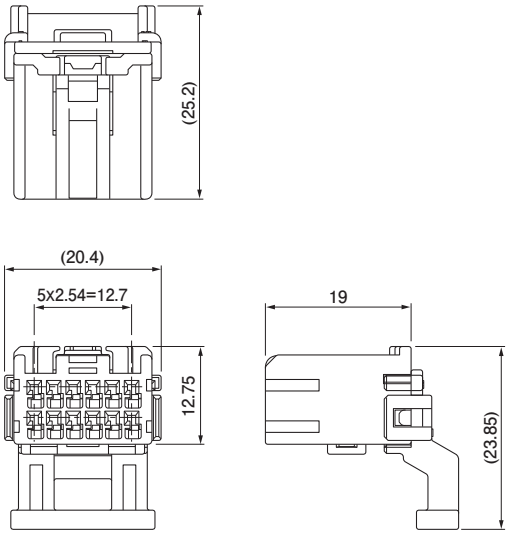

●18 circuits

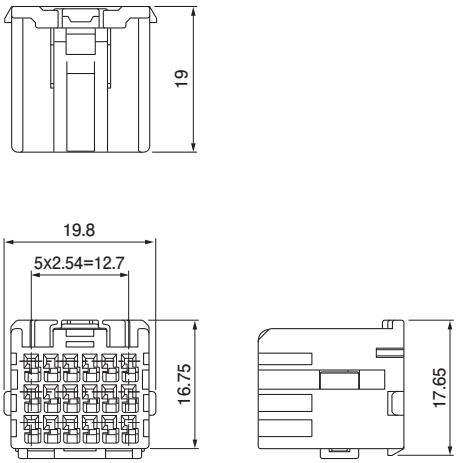

●18 circuits (With back cover)

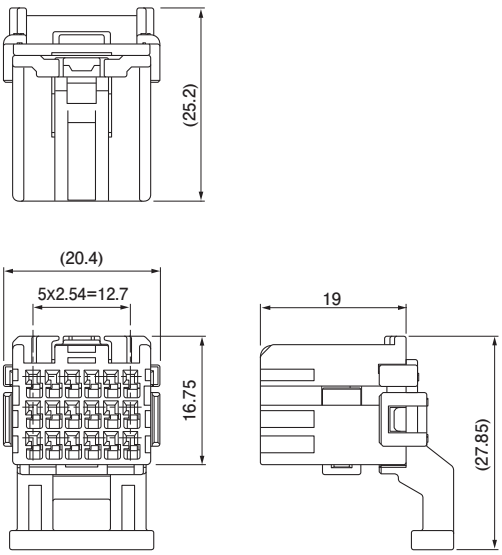

Female connector

●22 circuits

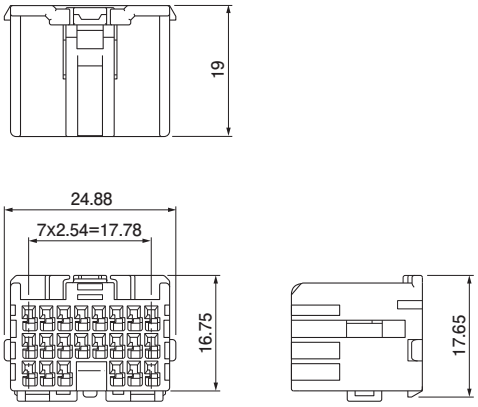

●22 circuits (With back cover)

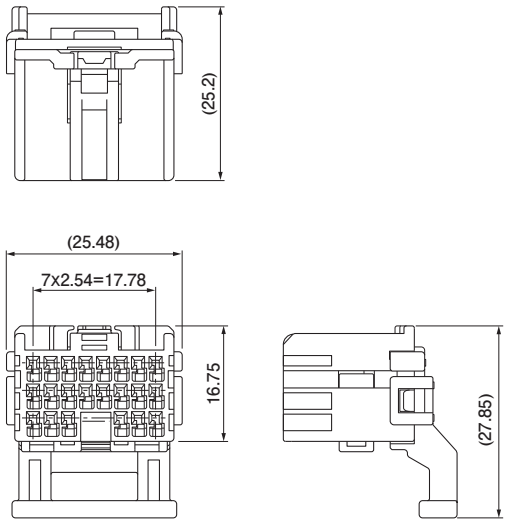

Circuits	Model No.	Back Cover	Q'ty/box
12	**ARVPB-12-2AK**	No	1,500
	ARVPB-12C12-2AK	Yes	1,500
18	**ARVPB-18-3AK**	No	1,000
	ARVPB-18C18-3AK	Yes	1,000
22	**ARVPB-22-3AK**	No	600
	ARVPB-22C22-3AK	Yes	500

Material and Finish
Housing: PBT, Black TPA: Glass-filled PBT, Natural (White) Back cover: Glass-filled PBT, Black

Male terminal

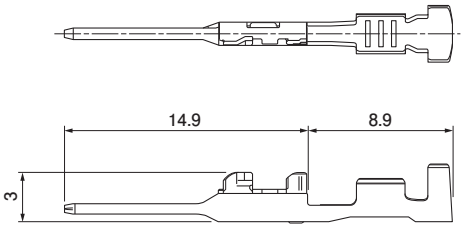

Model No.	Applicable wire range		Q'ty/reel
	Conductor (mm^2)	Insulation O.D. (mm)	
SNAC3W-A021T-0.64	0.35 to 0.5	≤1.7	7,000

Material and Finish
Brass, tin-plated (reflow treatment)

Male connector

●12 circuits (Screw hole Mountable Type)

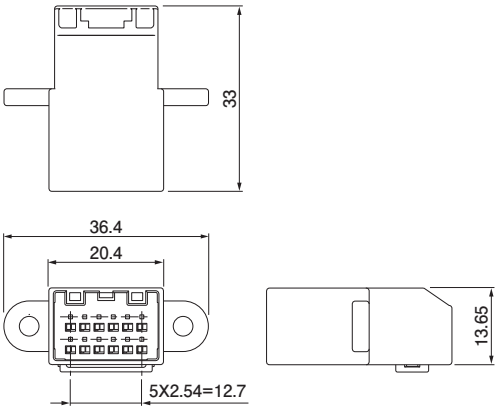

●12 circuits (Clip Mountable Type)

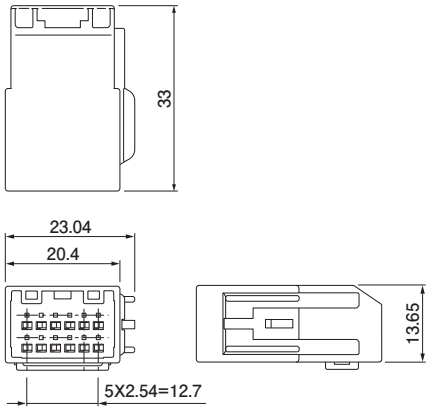

●18 circuits (Screw hole Mountable Type)

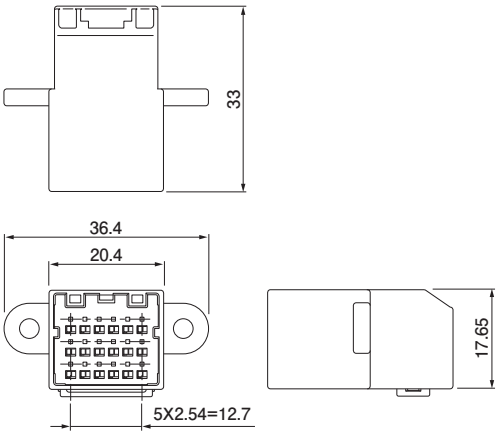

●18 circuits (Clip Mountable Type)

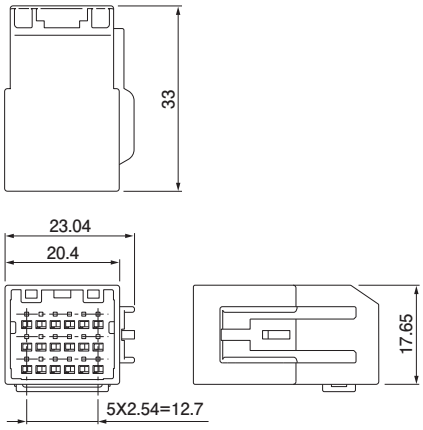

●22 circuits (Screw hole Mountable Type)

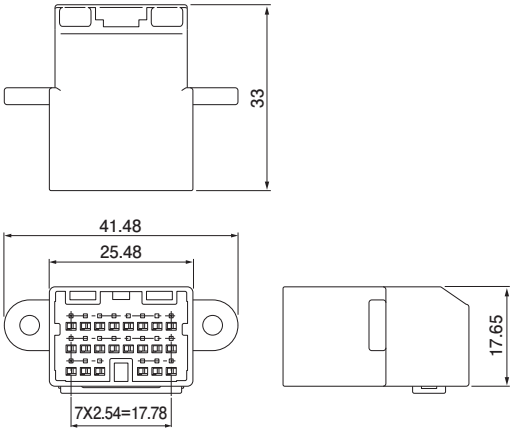

●22 circuits (Clip Mountable Type)

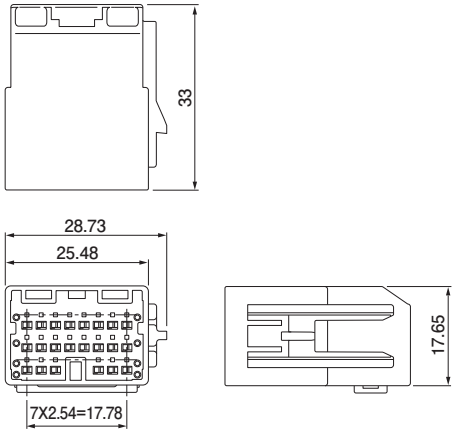

Circuits	Model No.	Mountable Style	Q'ty/box
12	ARVWSB-12B-2AK	Screw hole	1,000
	ARVWSB-12BC-2AK	Clip	1,000
18	ARVWSB-18-3AK	Screw hole	750
	ARVWSB-18C-3AK	Clip	750
22	ARVWSB-22-3AK	Screw hole	450
	ARVWSB-22C-3AK	Clip	450

Material and Finish
Housing: Glass-filled PBT, Black PBT, Black (22P only) TPA: Glass-filled PBT, Natural (White)

Assemby layout

●12 circuits

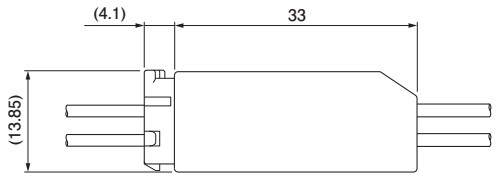

●18, 22 circuits

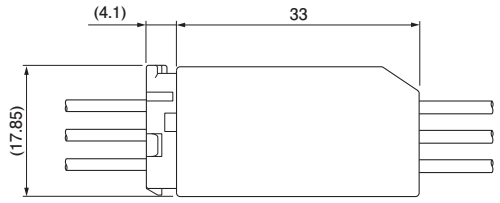

●12 circuits (With back cover)

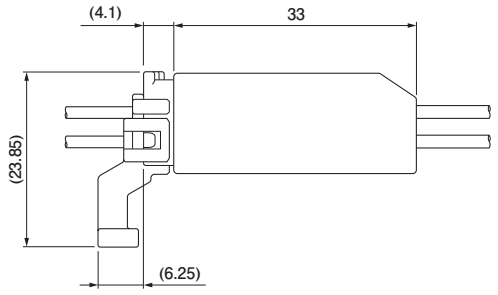

●18, 22 circuits (With back cover)

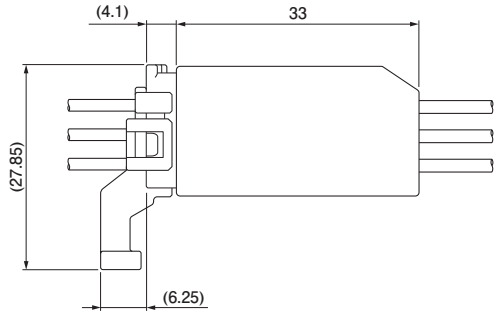

Crimping machine, Applicator

Strip terminal	Crimping machine	Crimp applicator MKS-L	
		Dies	Crimp applicator with dies
SAIT-A03( )-M064	AP-K2N	MK/SAIT-A03-064	APLMK SAIT-A03-064
SAIT-A02( )-M064		MK/SAIT-A02-064	APLMK SAIT-A02-064
SNAC3W-A021( )-0.64		MK/SNAC3W-A021-064	APLMK SNAC3W-A021-064

Note: When crimping operation is conducted using an applicator and die set other than the above, JST cannot guarantee the performance of the terminal.