CPI CONNECTOR

Board-to-wire

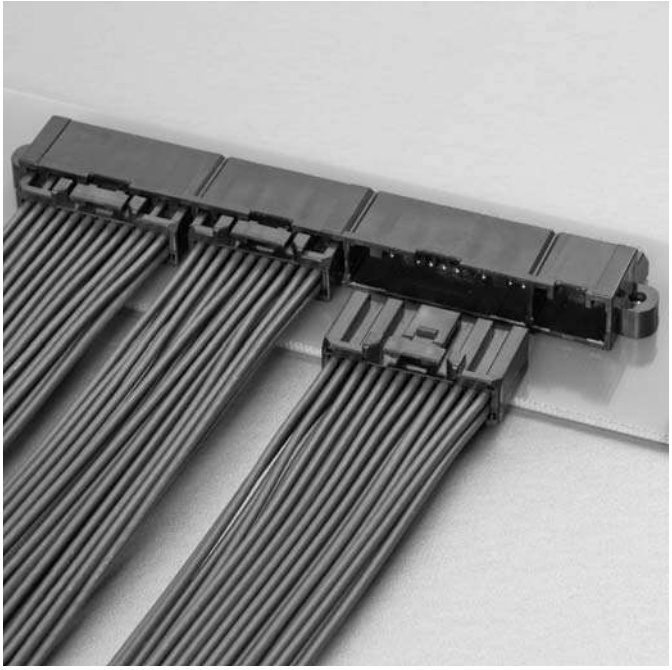

Developed in pursuit of multi-circuit, miniaturization and low profile as PC board connector for automobile.
This connector is dip type connector having the spring structure on male terminal.

Features

●Multi-circuit and Compact design

Although this connector is multi-circuit, the miniaturization and low profile are realized by unification of frontage and 2.0 mm pitch.

●Terminal construction

By having given a spring structure to the male terminal, the female terminal can be made into a simple box shape structure.

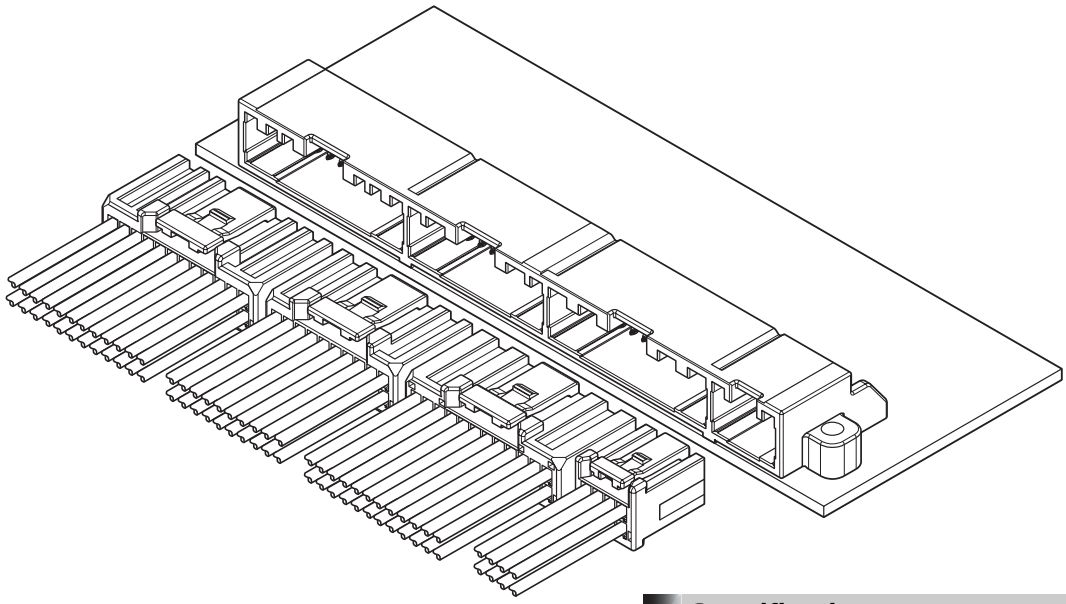

Specifications

- Current rating: 3 A AC, DC (0.3 mm^2, Single circuit)
- Voltage rating: 50 V AC, DC
- Temperature range: –40°C to +100°C
  (including temperature rise in applying electrical current)
- Contact resistance: Initial value/ 8 mΩ max.
  After environmental tests/ 16 mΩ max.
- Insulation resistance: 100 MΩ min.
- Withstanding voltage: 1,000 VAC/minute
- Applicable wire: AESSX-f/ AVSS
  0.3 mm^2 (AWG #22)

∗ Compliant with ELV/RoHS.
∗ Contact JST for details.

Female terminal

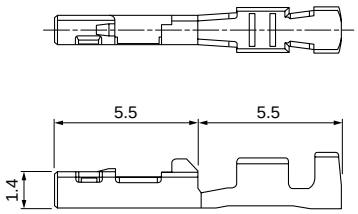

Model No.	Applicable wire range		Q'ty/reel
	Conductor (mm^2)	Insulation O.D. (mm)	
SCPT-A021GF-0.5	0.3	1.4	15,000

Material and Finish
Brass, nickel-undercoated, Contact area; gold-plated Barrel area; tin-plated

Female connector

A Block

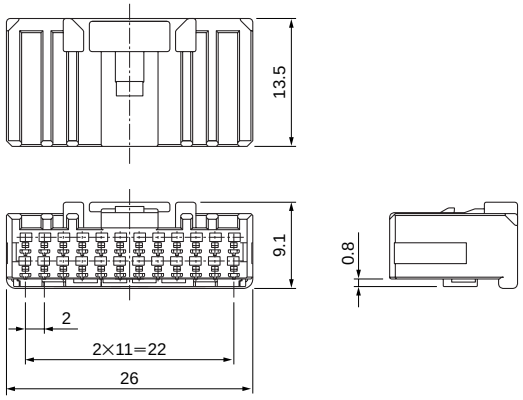

C Block

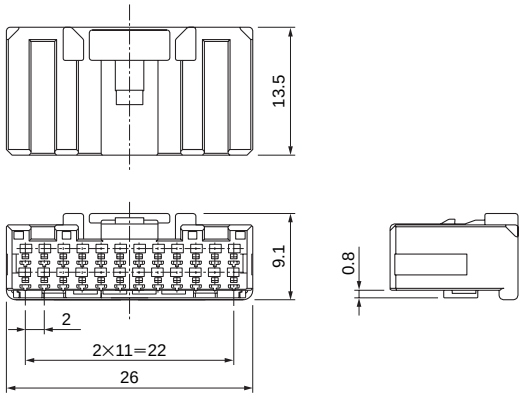

B Block

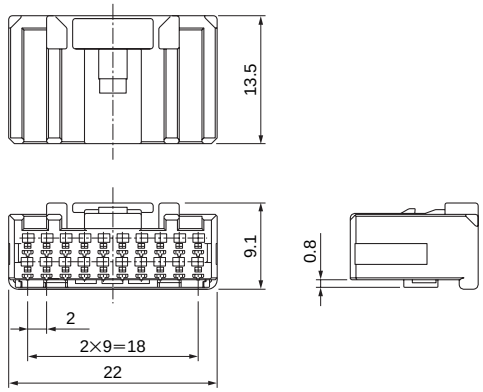

D Block

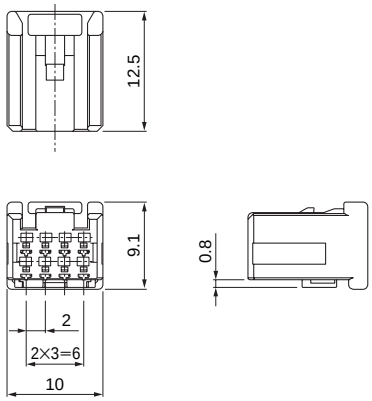

Type	Circuits	Model No.	Q'ty/box
A Block	24	**24CPT-B-2B**	200
B Block	20	**20CPT-B-2A**	250
C Block	24	**24CPT-B-2A**	200
D Block	8	**08CPT-B-2A**	500

Material
Housing: Glass-filled PBT, black Retainer: Glass-filled PBT, blue

Male connector

● **58 circuits**

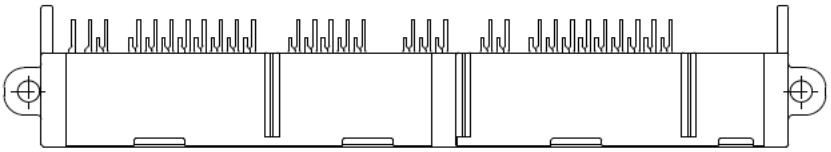

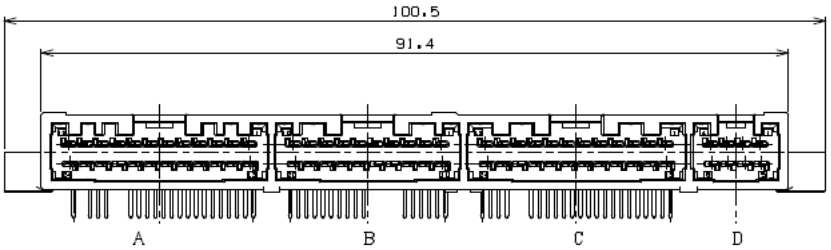

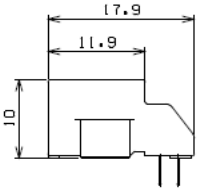

● **69 circuits**

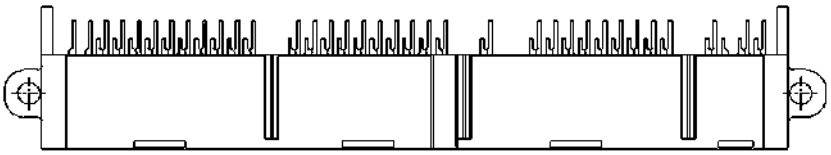

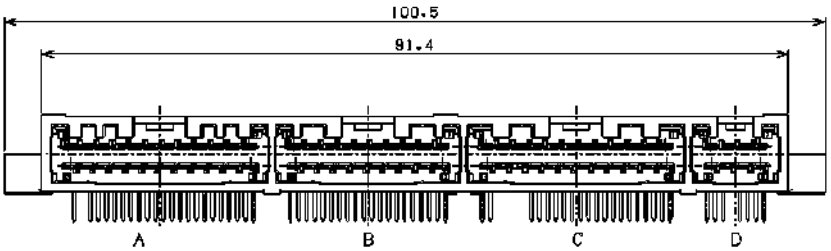

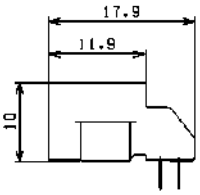

● **76 circuits**

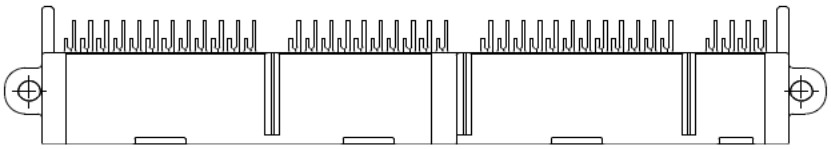

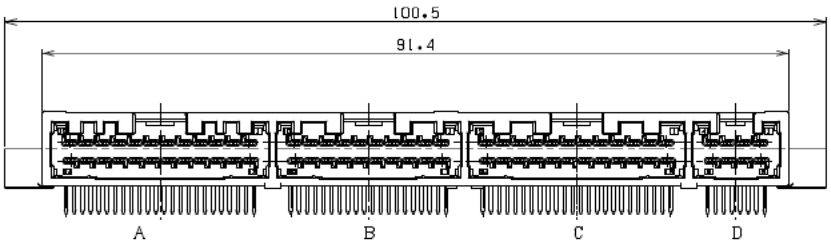

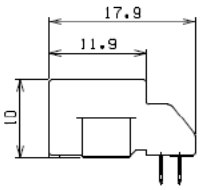

Circuits	Model No.	Q'ty/box
58	**S58B-CPIK-1A (M)**	450
69	**S69B-CPIK-1A (M)**	450
76	**S76B-CPIK-1A (M)**	450

Material and Finish
Terminal:Copper alloy, nickel-undercoated, Contact area;gold-plated Solder tail;tin-plated(reflow treatment) Housing:Glass-filled SPS, black

PC board layout

● **58 circuits**

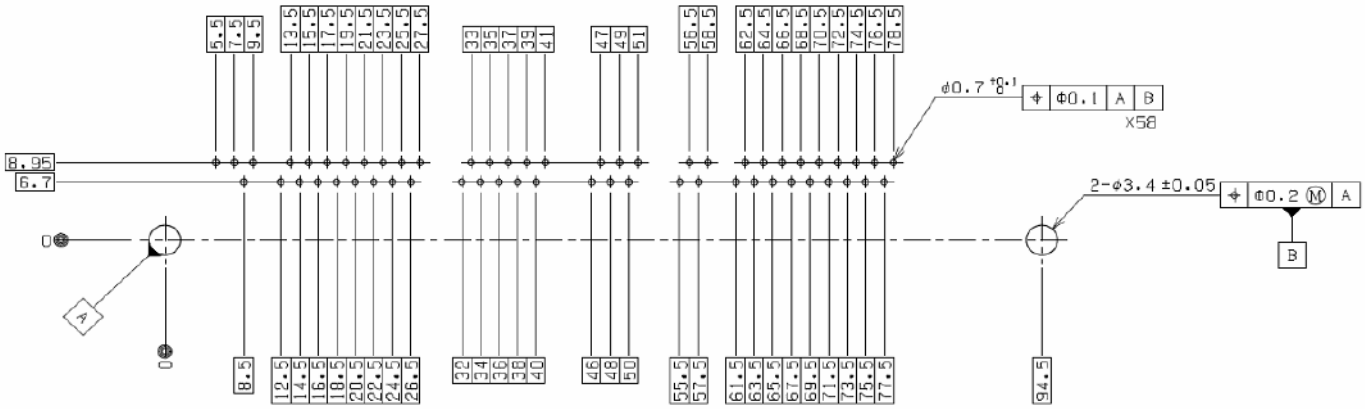

● **69 circuits**

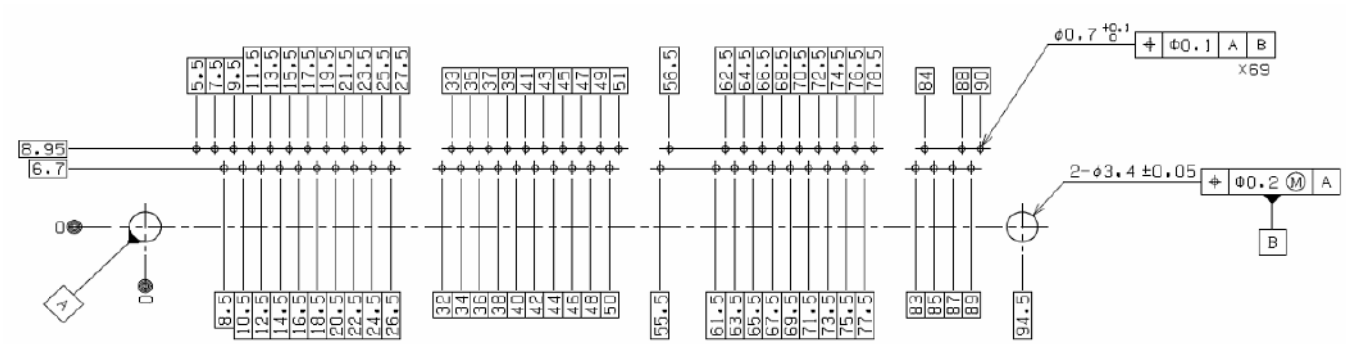

● **76 circuits**

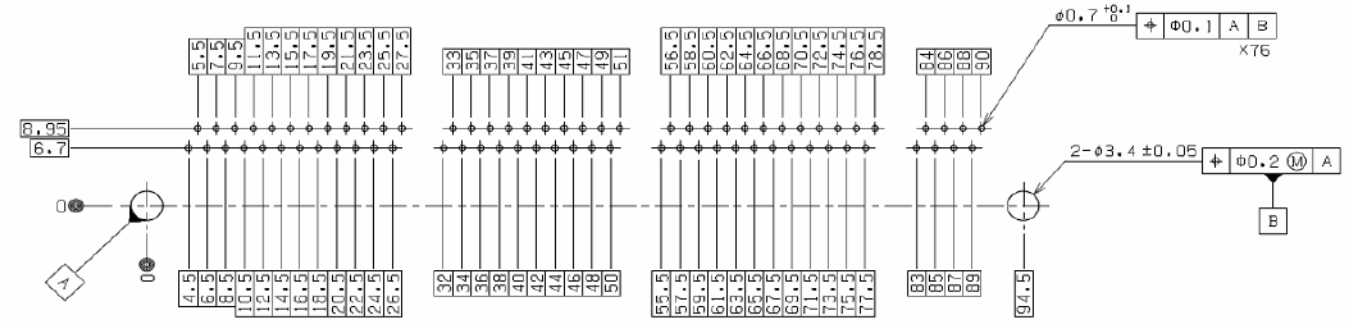

Note: 1. Tolerance are non-cumulative.
2. Hole dimensions differ according to the type of PC board and piercing method.
The dimensions above should serve as guideline. Contact JST for details.

Crimping machine, Applicator

Strip terminal	Crimping machine	Crimp applicator MKS-L	
		Dies	Crimp Applicator with dies
SCPT-A021GF-0.5	AP-K2N	MK/SCPT-A021-05	APLMK SCPT-A021-05

Note: When crimping operation is conducted using an applicator and die set other than the above, JST cannot guarantee the performance of the terminal.