JFA CONNECTOR J1000 SERIES

2.2 mm pitcth/Disconnectable Crimp style connectors (For Wire-to-board/Wire-to-wire)

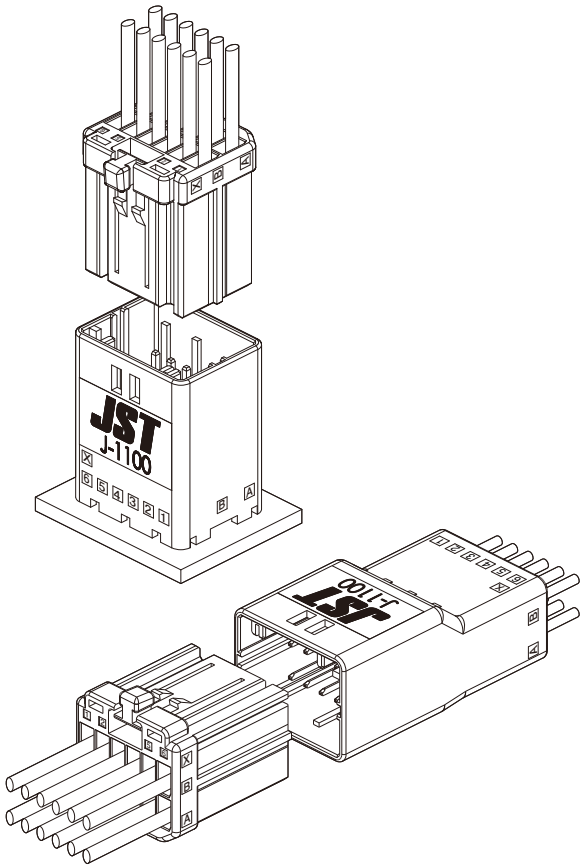

Connectors for signal circuit or power supply circuit, applicable to the factory automation, heavy electric machinery, and other industrial equipment in general.
In spite of various kinds of housings available, their contacts are designed to be common.
The applicable tooling can be standardized.

- **Double-spring construction**
- **Up to AWG #18 with 2.2 mm pitch**
- **Housing lance**
- **Secure locking method**

■ Standards

UL® : Recognized E 60389

■ Specifications

・Current rating: AC/DC

Unit : A

No. of circuits	Wire size (AWG)					
	#18	#20	#22	#24	#26	#28
3	6.4	5.4	4.8	4.0	3.4	2.8
6	5.5	4.6	4.0	3.4	2.9	2.4
8	5.5	4.6	4.0	3.1	2.6	2.2
12	4.7	3.9	3.4	2.7	2.6	2.0
20	4.0	3.4	3.0	2.4	2.0	1.8
22	3.9	3.3	2.9	2.3	1.9	1.7
26	3.6	3.0	2.6	2.2	1.8	1.6
30	3.6	3.0	2.6	2.1	1.7	1.5

・Voltage rating: 125 V AC/DC…J1100 series
250 V AC/DC…J1800 series
・Temperature range: -55℃ to +105℃
(including temperature rise in applying electrical current)
・Applicable wire: AWG #28 to #18
・Applicable PC board thickness: 1.6 mm

* In using the products, refer to "Handling Precautions for Terminals and Connectors" described on our website (Technical documents of Product information page).
* RoHS2 compliance
* Dimensional unit: mm
* Contact JST for details.

J1000 series products line-up

Type		2.2 mm pitch , Voltage rating 125 V AC/DC		
		Wire-to-board		Wire-to-wire
		Top entry type	Side entry type	Free hanging type
Center locking type	J1100 Single-row type	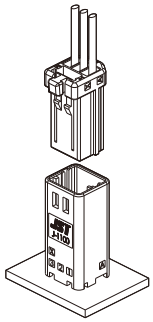	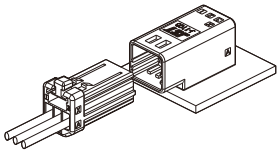	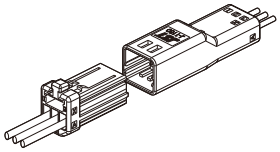
	No. of circuits	3	3	3
	J1100 Dual-row type	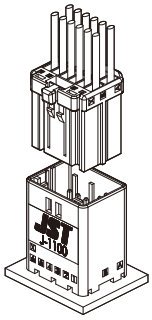	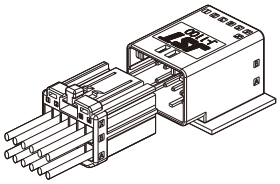	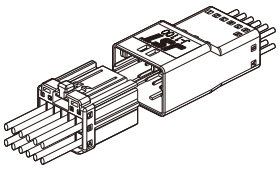
	No. of circuits	6, 8, 12, 20, 22, 26, 30	6, 8, 12, 20, 30	6, 8, 12, 20, 26

Type		2.2 mm pitch , Voltage rating 250 V AC/DC	
		Wire-to-board	
		Top entry type	Side entry type
Side locking type (Thin type)	J1800 Single-row type	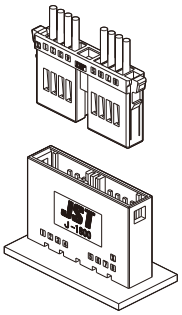	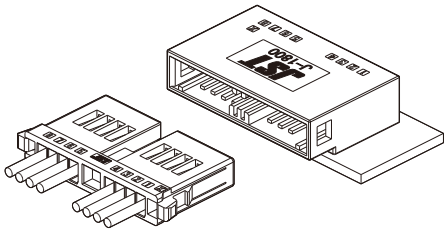
	No. of circuits	8	8

Receptacle contact

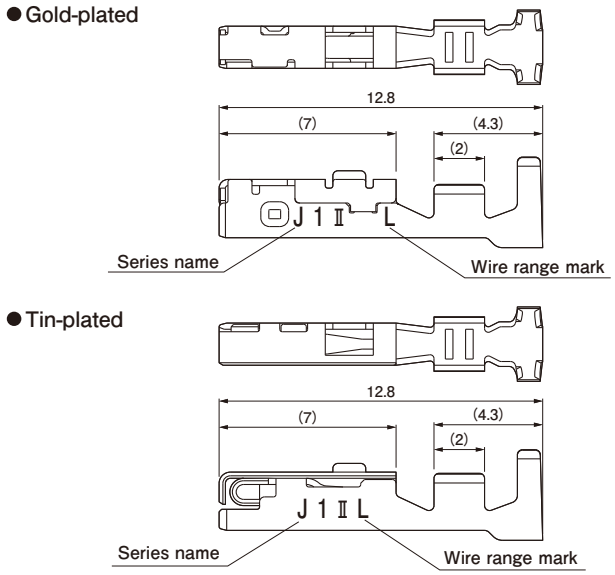

Strip contact Model No.	Series	Applicable wire			Insulation O.D. (mm)	Q'ty/ reel
		Size	mm²	AWG #		
SF1F-002GC-P0.6	Gold (0.2μm)	M	0.08～0.2	28～24	0.88～1.43	6,000
SF1F-002T-P0.6	Tin					
SF1F-01GC-P0.6	Gold (0.2μm)	ME	0.2～0.5	24～20	1.30～1.90	5,500
SF1F-21GC-P0.6	Gold (0.2μm)	L	0.3～0.8	22～18	1.50～2.10	5,000
SF1F-21T-P0.6	Tin					

Material and Finish
Copper alloy, nickel-undercoated, selective gold-plated Tin-plated

RoHS2 compliance

Note: 1. Contact JST for 0.76μm gold-plated product.
2. Please note that the above general specifications may differ from the safety standards.

Tab contact

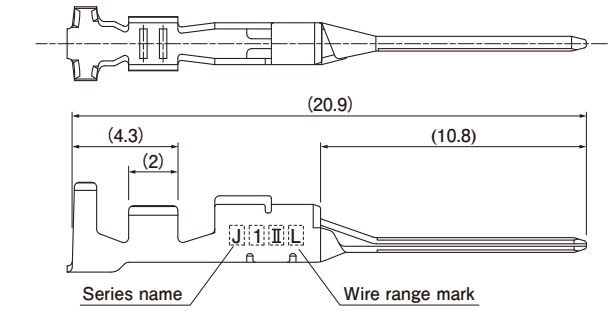

Strip contact Model No.	Series	Applicable wire			Insulation O.D. (mm)	Q'ty/ reel
		Size	mm²	AWG #		
SF1M-002GC-M0.6A	Gold (0.2μm)	M	0.08～0.2	28～24	0.88～1.43	6,000
SF1M-002T-M0.6A	Tin					
SF1M-01GC-M0.6A	Gold (0.2μm)	ME	0.2～0.5	24～20	1.30～1.90	5,500
SF1M-21GC-M0.6A	Gold (0.2μm)	L	0.3～0.8	22～18	1.50～2.10	5,000
SF1M-21T-M0.6A	Tin					

Material and Finish
Copper alloy, nickel-undercoated, selective gold-plated Tin-plated

RoHS2 compliance

Note: 1. Contact JST for 0.76μm gold-plated product.
2. Please note that the above general specifications may differ from the safety standards.

Crimping machine, Applicator

Strip contact Model No.	Crimping machine	Applicator			
		Crimp applicator	Dies	Crimp applicator with dies	Hand tool
SF1F-002(*)-P0.6 SF1M-002(*)-M0.6A	AP-K2N	MKS-L	MK/SF1F/ M-002-06	APLMK SF1F/ M002-06	YRK-1220
SF1F-01GC-P0.6 SF1M-01GC-M0.6A	AP-K2N	MKS-L	MK/SF1F/ M-01-06	APLMK SF1F/ M01-06	YRK-1230

Strip contact Model No.	Crimping machine	Applicator			
		Crimp applicator	Dies	Crimp applicator with dies	Hand tool
SF1F-21(*)-P0.6 SF1M-21(*)-M0.6A	AP-K2N	MKS-L	MK/SF1F/ M-21-06	APLMK SF1F/ M21-06	YRK-1210

Note: Finish (*): GC...Nickel-undercoated, 0.2μm selective gold-platted
T... Tin-plated

- Extraction tool for J1100 series: EJ-JFAJ1100/EJ-JFAJ1100N
- Extraction tool for J1800 series: EJ-JFAJ18
- Refer to crimping tools for details of YRK series hand crimping tools that uses a strip contact.

Note: Contact JST for fully automatic crimping applicator.

Recognition mark

- Plating of the contact

Each contact has a marking on its side so that the type or thickness of the plating is recognized.
ex. 1 ... gold-plated 0.2μm thickness
3 ... gold-plated 0.76μm thickness
5 ... tin-plated

- Common marking on the contact and its application tools

In order to avoid incorrect combination of the hand crimp tools or extraction tools and the contacts, the series name (for example J1Ⅱ) and wire range mark (M, ME, L) are shown on both the tools and the contacts.

For example J1Ⅱ M..... AWG #28 ～ #24
ME.... AWG #24 ～ #20
L..... AWG #22 ～ #18

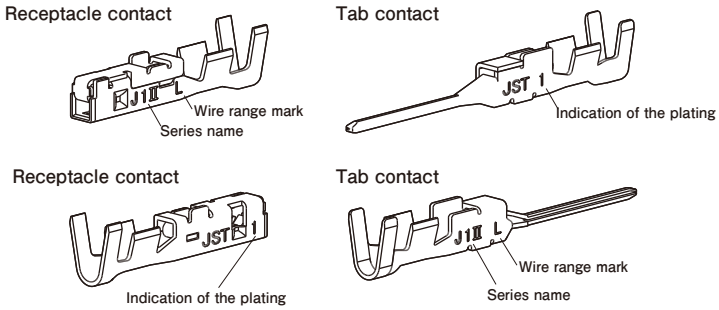

Assembly layout

Type	Wire-to-board		Wire-to-wire
	Top entry type	Side entry type	Free hanging type
J1100 Single-row type	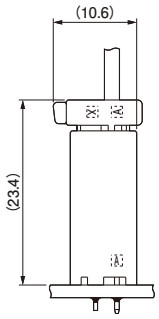	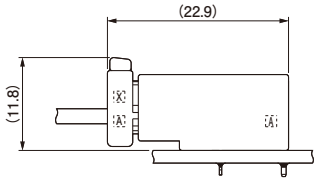	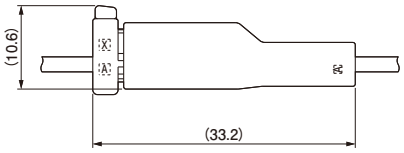
J1100 Dual-row type	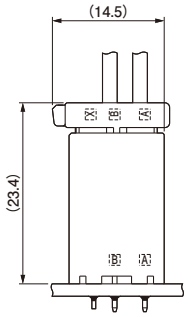	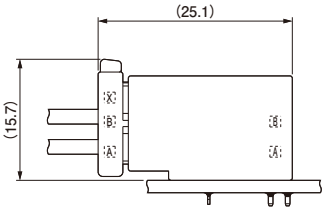	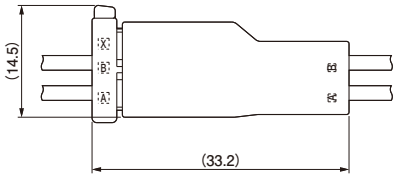

Receptacle housing

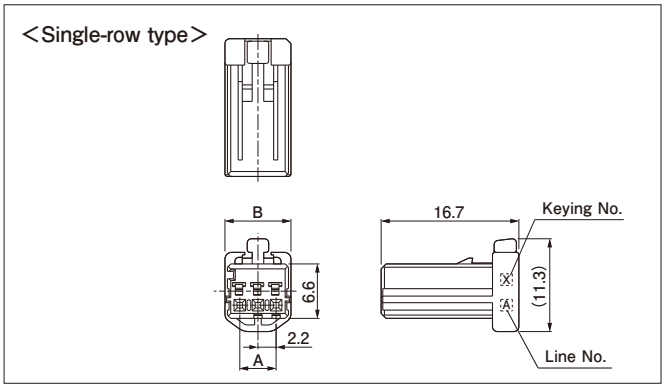

No. of circuits	Keying	Model No.	Dimensions (mm)		Q'ty/box
			A	B	
3	X	J11SF-03V-KX	4.4	8.0	1,200
	Y	J11SF-03V-KY	4.4	8.0	1,200

Material and Finish

Glass-filled PBT, UL94V-0, black

RoHS2 compliance

Tab housing

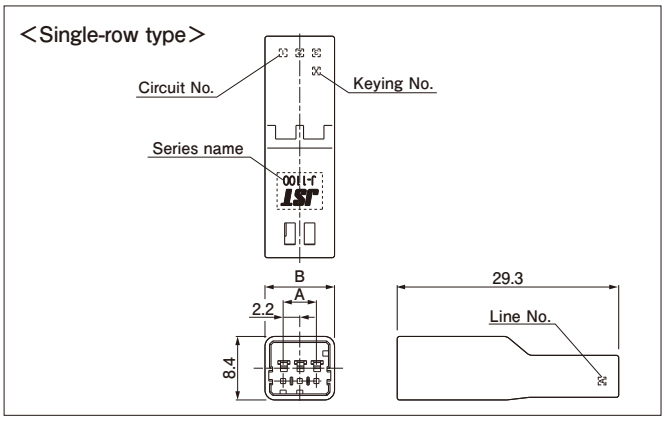

No. of circuits	Keying	Model No.	Dimensions (mm)		Q'ty/box
			A	B	
3	X	J11SFM-03V-KX	4.4	9.2	500
	Y	—	—	—	—

Material and Finish

Glass-filled PBT, UL94V-0, black

RoHS2 compliance

Header Top entry type

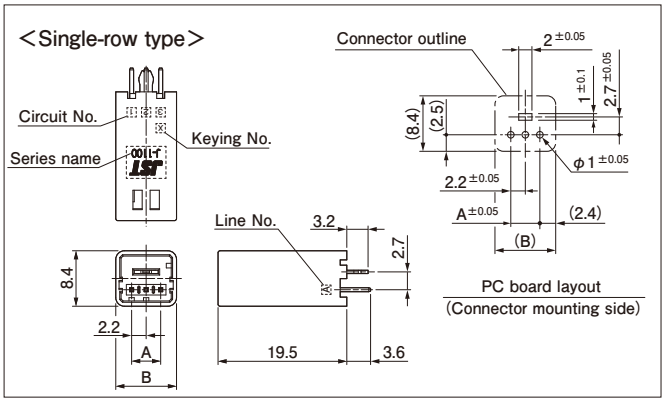

No. of circuits	Plating	Keying	Model No.	Dimensions (mm)		Q'ty/box
				A	B	
3	Gold (0.2μm)	X	B03B-J11SK-GWXR	4.4	9.2	625
		Y	B03B-J11SK-GWYR			
	Tin	X	B03B-J11SK-TXR	4.4	9.2	625
		Y	B03B-J11SK-TYR			

Material and Finish

Post: Copper alloy, gold-plated, tin-plated
Housing: Glass-filled PBT, UL94V-0, black
Reinforcement: Copper alloy, tin-plated

RoHS2 compliance

Note: 1. Gold-plated product displays (LF) on a label.
2. Contact JST for 0.76μm gold-plated product.

Header Side entry type

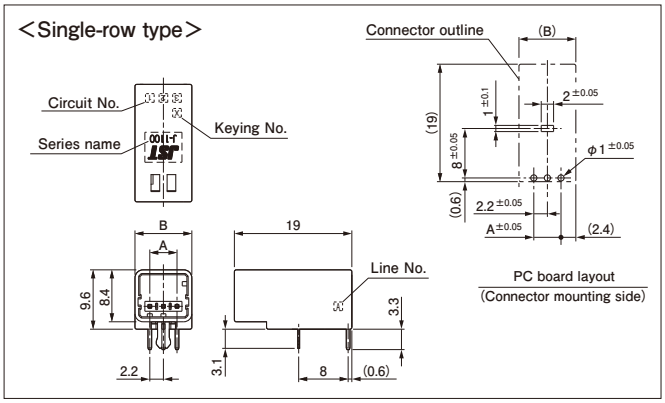

No. of circuits	Plating	Keying	Model No.	Dimensions (mm)		Q'ty/box
				A	B	
3	Gold (0.2μm)	X	S03B-J11SK-GWXR	4.4	9.2	600
		Y	S03B-J11SK-GWYR			
	Tin	X	S03B-J11SK-TXR	4.4	9.2	600
		Y	S03B-J11SK-TYR			

Material and Finish

Post: Copper alloy, gold-plated, tin-plated
Housing: Glass-filled PBT, UL94V-0, black
Reinforcement: Copper alloy, tin-plated

RoHS2 compliance

Note: 1. Gold-plated product displays (LF) on a label.
2. Contact JST for 0.76μm gold-plated product.

Receptacle housing

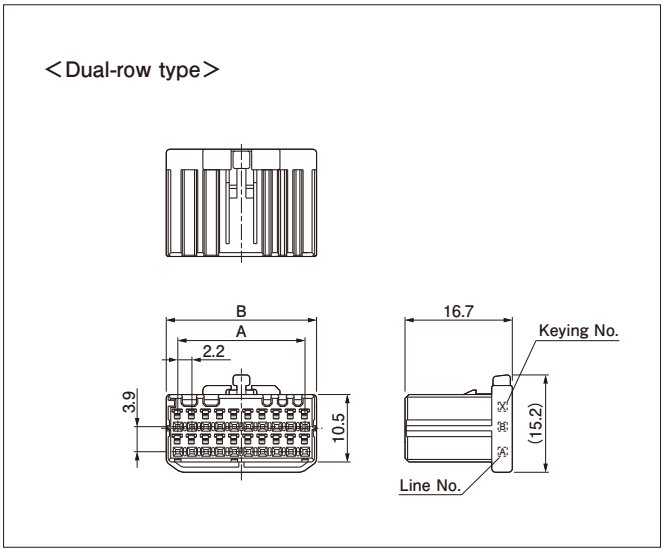

No. of circuits	Keying	Model No.	Dimensions (mm)		Q'ty/box
			A	B	
6	X	J11DF-06V-KX	4.4	8.0	800
	Y	J11DF-06V-KY	4.4	8.0	800
8	X	J11DF-08V-KX	6.6	10.2	500
	Y	J11DF-08V-KY	6.6	10.2	500
12	X	J11DF-12V-KX	11.0	14.6	400
	Y	J11DF-12V-KY	11.0	14.6	400
20	X	J11DF-20V-KX	19.8	23.4	250
	Y	J11DF-20V-KY	19.8	23.4	250
22	X	＊J11DF-22V-KX	22.0	25.6	250
	Y	＊J11DF-22V-KY	22.0	25.6	250
26	X	＊J11DF-26V-KX	26.4	30.0	200
	Y	＊J11DF-26V-KY	26.4	30.0	200
30	X	＊J11DF-30V-KX	30.8	34.4	180
	Y	＊J11DF-30V-KY	30.8	34.4	180

Material and Finish
Glass-filled PBT, UL94V-0, black

RoHS2 compliance
Note: ＊ Marked products are unlisted in UL.

Tab housing

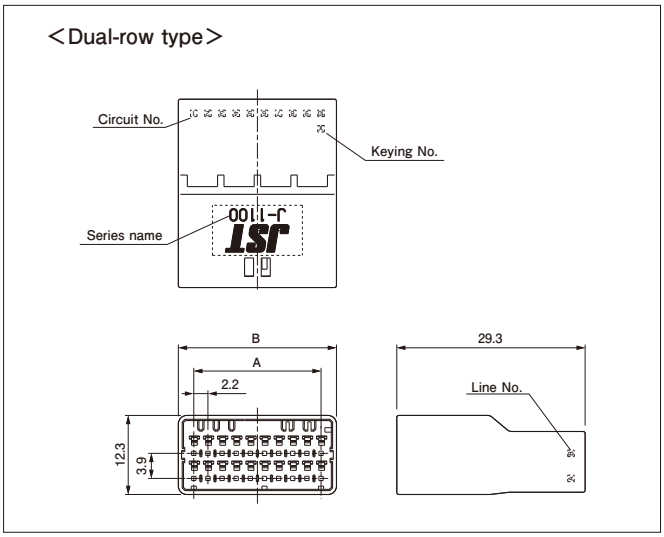

No. of circuits	Keying	Model No.	Dimensions (mm)		Q'ty/box
			A	B	
6	X	J11DFM-06V-KX	4.4	9.2	400
	Y	J11DFM-06V-KY	4.4	9.2	400
8	X	J11DFM-08V-KX	6.6	11.4	300
	Y	—	—	—	—
12	X	J11DFM-12V-KX	11.0	15.8	200
	Y	—	—	—	—
20	X	J11DFM-20V-KX	19.8	24.6	150
	Y	—	—	—	—
26	X	＊J11DFM-26V-KX	26.4	31.2	120
	Y	＊J11DFM-26V-KY	26.4	31.2	120

Material and Finish
Glass-filled PBT, UL94V-0, black

RoHS2 compliance
Note: ＊ Marked products are unlisted in UL.

Header Top entry type

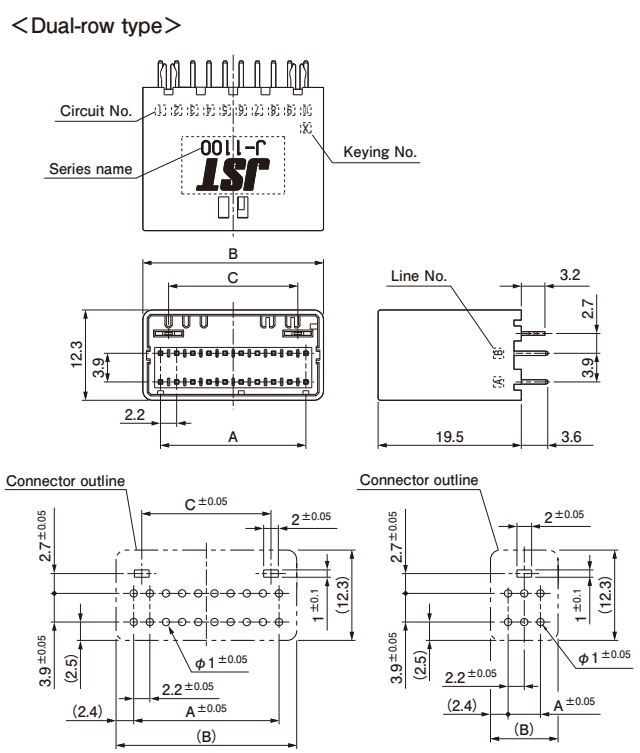

No. of circuits	Plating	Keying	Model No.	Dimensions (mm) A	B	C	Q'ty/box
6	Gold (0.2μm)	X	B06B-J11DK-GWXR	4.4	9.2	—	500
		Y	B06B-J11DK-GWYR				
	Tin	X	B06B-J11DK-TXR	4.4	9.2	—	500
		Y	B06B-J11DK-TYR				
8	Gold (0.2μm)	X	B08B-J11DK-GWXR	6.6	11.4	4.4	400
		Y	B08B-J11DK-GWYR				
	Tin	X	B08B-J11DK-TXR	6.6	11.4	4.4	400
		Y	B08B-J11DK-TYR				
12	Gold (0.2μm)	X	B12B-J11DK-GWXR	11.0	15.8	8.8	280
		Y	B12B-J11DK-GWYR				
	Tin	X	B12B-J11DK-TXR	11.0	15.8	8.8	280
		Y	B12B-J11DK-TYR				
20	Gold (0.2μm)	X	B20B-J11DK-GWXR	19.8	24.6	17.6	180
		Y	B20B-J11DK-GWYR				
	Tin	X	B20B-J11DK-TXR	19.8	24.6	17.6	180
		Y	B20B-J11DK-TYR				
22	Gold (0.2μm)	X	＊B22B-J11DK-GWXR	22.0	26.8	19.8	160
		Y	＊B22B-J11DK-GWYR				
26	Gold (0.2μm)	X	＊B26B-J11DK-GWXR	26.4	31.2	24.2	140
		Y	＊B26B-J11DK-GWYR				
30	Gold (0.2μm)	X	＊B30B-J11DK-GWXR	30.8	35.6	28.6	120
		Y	＊B30B-J11DK-GWYR				

Material and Finish

Post: Copper alloy, gold-plated, tin-plated
Housing: Glass-filled PBT, UL94V-0, black
Reinforcement: Copper alloy, tin-plated

RoHS2 compliance

Note: 1. Gold-plated product displays (LF) on a label.
2. Contact JST for 0.76μm gold-plated product.
3. ＊ Marked products are unlisted in UL.

Header Side entry type

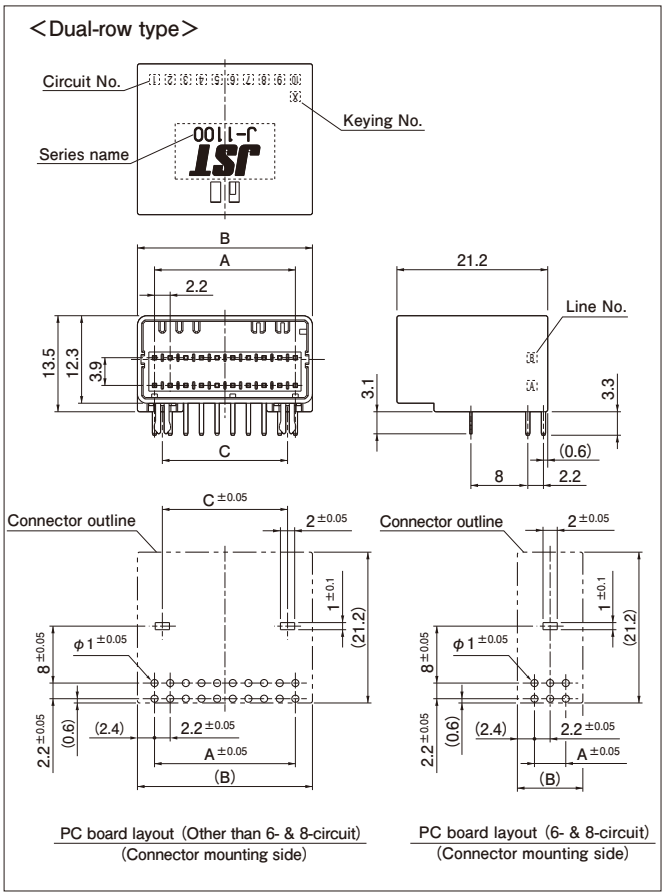

No. of circuits	Plating	Keying	Model No.	Dimensions (mm) A	B	C	Q'ty/box
6	Gold (0.2μm)	X	S06B-J11DK-GWXR	4.4	9.2	—	375
		Y	S06B-J11DK-GWYR				
	Tin	X	S06B-J11DK-TXR	4.4	9.2	—	375
		Y	S06B-J11DK-TYR				
8	Gold (0.2μm)	X	S08B-J11DK-GWXR	6.6	11.4	—	300
		Y	S08B-J11DK-GWYR				
	Tin	X	S08B-J11DK-TXR	6.6	11.4	—	300
		Y	S08B-J11DK-TYR				
12	Gold (0.2μm)	X	S12B-J11DK-GWXR	11.0	15.8	8.8	225
		Y	S12B-J11DK-GWYR				
	Tin	X	S12B-J11DK-TXR	11.0	15.8	8.8	225
		Y	S12B-J11DK-TYR				
20	Gold (0.2μm)	X	S20B-J11DK-GWXR	19.8	24.6	17.6	135
		Y	S20B-J11DK-GWYR				
	Tin	X	S20B-J11DK-TXR	19.8	24.6	17.6	135
		Y	S20B-J11DK-TYR				
30	Gold (0.2μm)	X	＊S30B-J11DK-GWXR	30.8	35.6	28.6	90
		Y	—	—	—	—	—

Material and Finish

Post: Copper alloy, gold-plated, tin-plated
Housing: Glass-filled PBT, UL94V-0, black
Reinforcement: Copper alloy, tin-plated

RoHS2 compliance

Note: 1. Gold-plated product displays (LF) on a label.
2. Contact JST for 0.76μm gold-plated product.
3. ＊ Marked product is unlisted in UL.

Assembly layout

Type	Wire-to-board	
	Top entry type	Side entry type
Single-row type	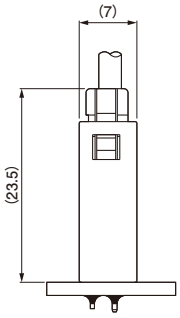	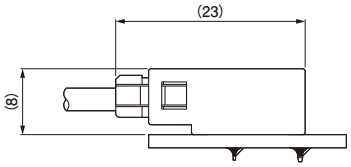

Receptacle housing

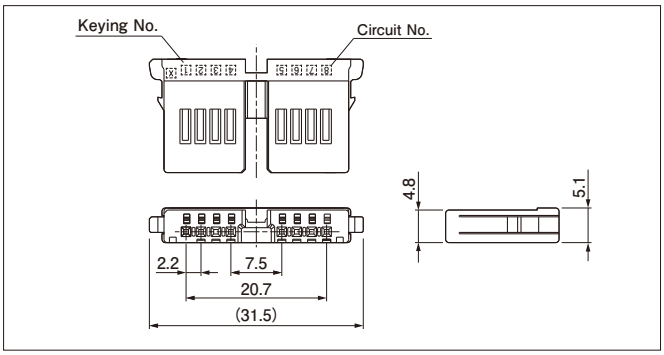

No. of circuits	Keying	Model No.	Q'ty/box
8	X	J18SF-08V-KX	450
	Y	—	—

Material and Finish
Glass-filled PBT, UL94V-0, black

RoHS2 compliance

Header Top entry type

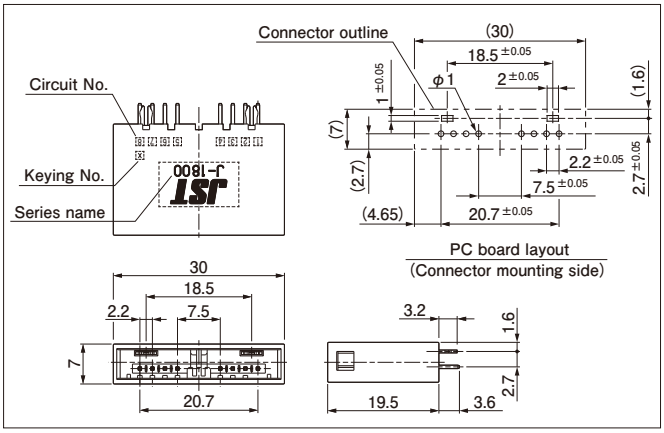

No. of circuits	Keying	Model No.	Q'ty/box
8	X	B08B-J18SK-TXR	245
	Y	—	—

Material and Finish
Post: Copper alloy, tin-plated Housing: Glass-filled PBT, UL94V-0, black Reinforcement: Copper alloy, tin-plated

RoHS2 compliance

Header Side entry type

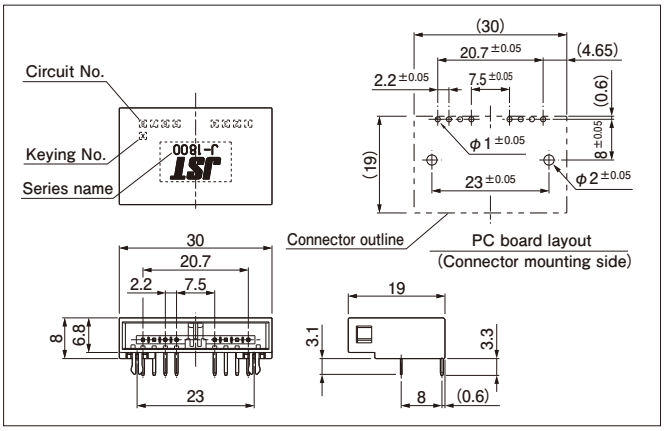

No. of circuits	Keying	Model No.	Q'ty/box
8	X	S08B-J18SK-TXR	220
	Y	—	—

Material and Finish
Post: Copper alloy, tin-plated Housing: Glass-filled PBT, UL94V-0, black Reinforcement: Copper alloy, tin-plated

RoHS2 compliance

Model number allocation

Receptacle contact

S F1 F - 21 T - P 0.6

- Form: S···Strip form
- Series name
- Kind of terminal: F···Receptacle contact
- Applicable wire: 002···AWG #28 ～ AWG #24
  01···AWG #24 ～ AWG #20
  21···AWG #22 ～ AWG #18
- Surface finish: GC···Nickel-undercoated, selective gold-plated (0.2 μm)
  GI···Nickel-undercoated, selective gold-plated (0.76 μm)
  T···Tin-plated
- Material: P···Copper alloy
- Terminal size

Tab contact

S F1 M - 21 T - M 0.6 A

- Form: S···Strip form
- Series name
- Kind of terminal: M···Tab contact
- Applicable wire: 002···AWG #28 ～ AWG #24
  01···AWG #24 ～ AWG #20
  21···AWG #22 ～ AWG #18
- Surface finish: GC···Nickel-undercoated, selective gold-plated (0.2 μm)
  GI···Nickel-undercoated, selective gold-plated (0.76 μm)
  T···Tin-plated
- Material: M···Copper alloy
- Terminal size
- Sub model number

Receptacle housing

J11 DF - 06 V - K X

- Series name
- Type of connector: SF···Single-row type
  DF···Dual-row type
- Circuits: 3, 6, 8, 12, 20, 22, 26, 30
- Flammability: V···UL94V-0
- Color indication: K···Black
- Keying: X···X-Keying, Y···Y-Keying

Tab housing

J11 DFM - 06 V - K X

- Series name
- Type of connector: SFM···Single-row type
  DFM···Dual-row type
- Circuits: 3, 6, 8, 12, 20, 26
- Flammability: V···UL94V-0
- Color indication: K···Black
- Keying: X···X-Keying, Y···Y-Keying

Header

B 06 B - J11 D K - T X R

- PC board mounting direction:
  B···Top entry type
  S···Side entry type
- Circuits: 3, 6, 8, 12, 20, 22, 26, 30
- Shape of assembled product
- Series name
- Rows: S···Single-row, D···Dual-row
- Color indication: K···Black
- Surface finish: GW···Nickel-undercoated, selective gold-plated (0.2 μm)
  GZ···Nickel-undercoated, selective gold-plated (0.76 μm)
  T···Tin-plated
- Keying: X···X-Keying, Y···Y-Keying
- Packaging form: R···Tray