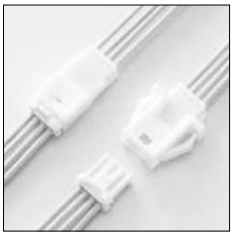

PNI CONNECTOR

2.0 mm pitch/Disconnectable Crimp style Wire-to-Wire connectors

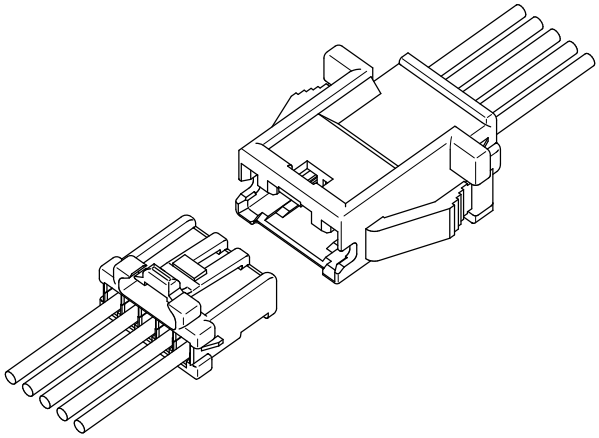

This connector is a 2.0 mm pitch wire-to-wire connector, having incomplete mating prevention mechanism.

- Inertial lock structure
- Finger-friendly design
- Secure locking structure
- Applicable for free-hanging and panel mounting types
- Retainer mountable type

■ Standards

UL :Recognized E 60389

■ Specifications

- Current rating: 3 A AC/DC (AWG #22)
- Voltage rating: 100 V AC/DC
- Temperature range: −25℃ to +85℃ (including temperature rise in applying electrical current)
- Contact resistance:
  Initial value/ 15 mΩ max.
  After environmental tests/ 25 mΩ max.
- Insulation resistance: 1,000 MΩ min.
- Withstanding voltage: 800 VAC/minute
- Applicable wire: AWG #28 to #22
- Applicable panel thickness: 0.5 to 2.0 mm

∗ In using the products, refer to "Handling Precautions for Terminals and Connectors" described on our website (Technical documents of Product information page).
∗ It does not comply with the Electrical Appliances and Materials Safety Act (Standard in Japan).
∗ RoHS2 compliance
∗ Dimensional unit: mm
∗ Contact JST for details.

Panel layout and Assembly layout

Without panel locks

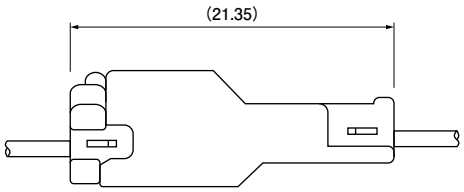

With panel locks

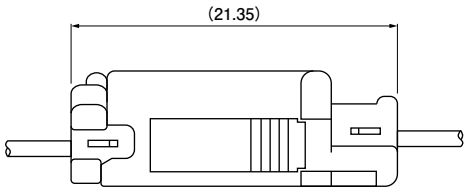

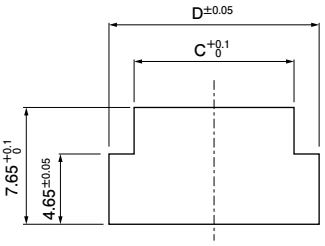

Note: C and D dimensions: Refer to receptacle housing section.

JST

Contact

Pin contact

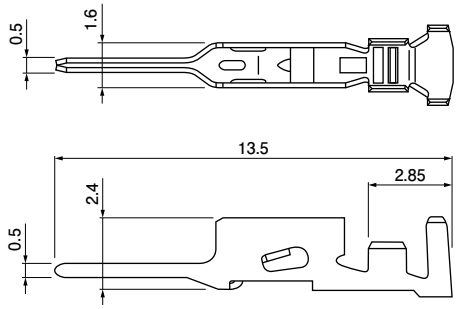

Socket contact

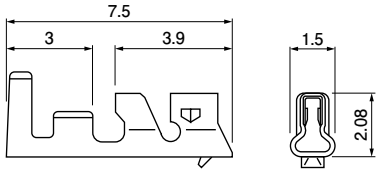

Pin contact

Model No.	Applicable wire range		Q'ty/reel
	Conductor size AWG# (mm2)	Insulation O.D. (mm)	
SPNI-002T-P0.5	28 to 24 (0.08 to 0.21)	0.76 to 1.5	9,000
SPNI-001T-P0.5	26 to 22 (0.13 to 0.33)	1.0 to 1.5	9,000

Material and Finish
Copper alloy, tin-plated

RoHS2 compliance

Crimping machine

Contact	Crimping machine	Applicator	Crimp applicator with dies
SPNI-002T-P0.5	AP-K2N	MKS-L	APLMK SPAL002-05
SPNI-001T-P0.5			APLMK SPAL001-05

Note: Contact JST for fully automatic crimping applicator.

Socket contact

Model No.	Applicable wire range		Q'ty/reel
	Conductor size AWG# (mm2)	Insulation O.D. (mm)	
SPND-002T-C0.5	28 to 24 (0.08 to 0.22)	0.76 to 1.5	8,000
SPND-001T-C0.5	26 to 22 (0.13 to 0.33)	1.0 to 1.5	8,000

Material and Finish
Copper alloy, tin-plated

RoHS2 compliance

Crimping machine

Contact	Crimping machine	Applicator	Crimp applicator with dies
SPND-002T-C0.5	AP-K2N	MKS-L	APLMK SPAD/ND002-05
SPND-001T-C0.5			APLMK SPND001-05

Note: Contact JST for fully automatic crimping applicator.

Receptacle housing (for pin contact)

Without panel locks
<2 to 6 circuits>

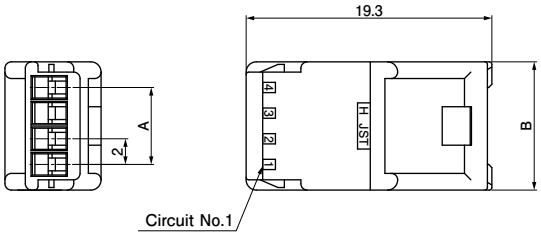

With panel locks
<2 to 6 circuits>

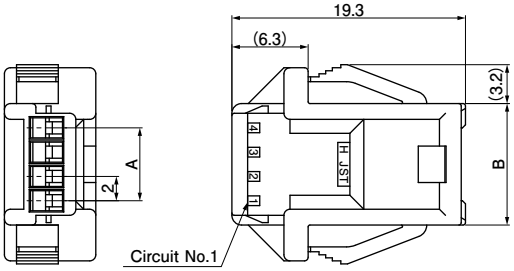

<8, 10 circuits>

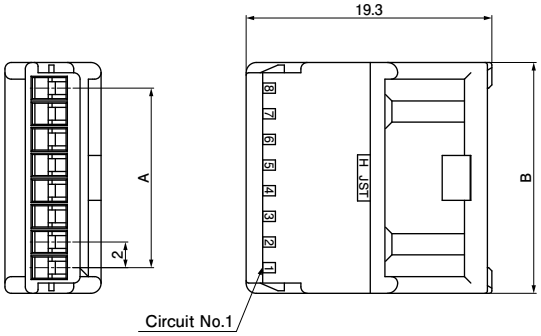

<8, 10 circuits>

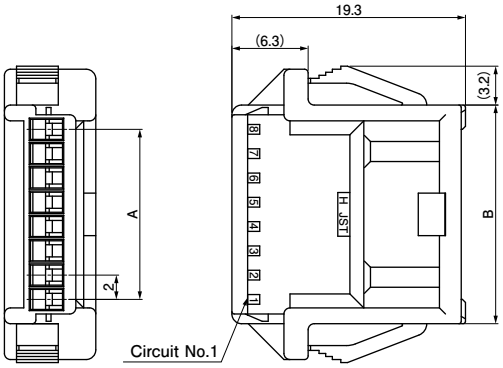

No. of circuits	Model No.		Dimensions (mm)				Q'ty/ bag
	Without panel locks	With panel locks	A	B	C	D	
2	**PNIRR-02VF**	**PNIRR-02V**	–	6.0	6.4	9.7	1,000
3	**PNIRR-03VF**	**PNIRR-03V**	4.0	8.0	8.4	11.7	1,000
4	**PNIRR-04VF**	**PNIRR-04V**	6.0	10.0	10.4	13.7	500
5	**PNIRR-05VF**	**PNIRR-05V**	8.0	12.0	12.4	15.7	500
6	**PNIRR-06VF**	**PNIRR-06V**	10.0	14.0	14.4	17.7	500
8	**PNIRR-08VF**	**PNIRR-08V**	14.0	18.0	18.4	21.7	500
10	**PNIRR-10VF**	**PNIRR-10V**	18.0	22.0	22.4	25.7	500

Material and Finish
PA 66, UL94V-0, natural (white)

RoHS2 compliance
Note: C and D dimensions: Panel layout dimensions

Socket housing (for socket contact)

<2 circuits>

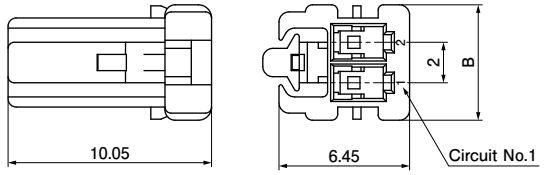

<3 circuits>

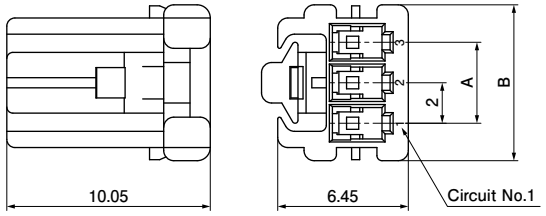

<4 circuits>

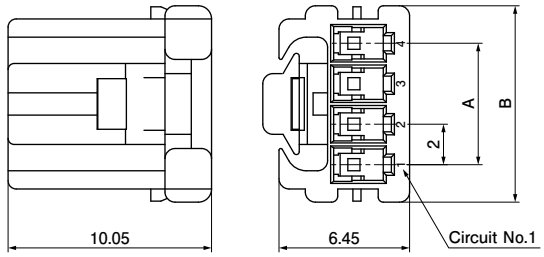

<5 circuits>

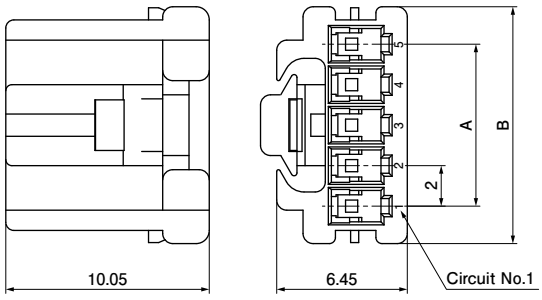

<6, 8, 10 circuits>

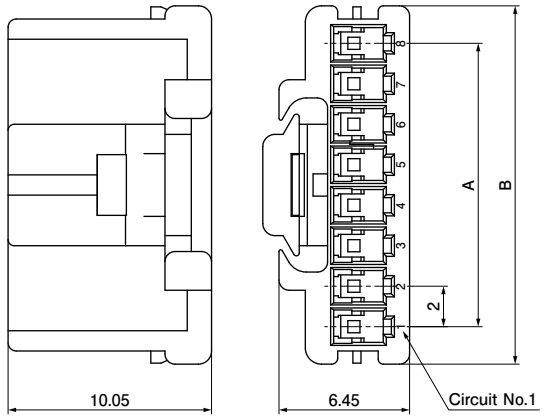

No. of circuits	Model No.	Dimensions (mm)		Q'ty/bag
		A	B	
2	**PNIRP-02V-S**	—	5.7	1,000
3	**PNIRP-03V-S**	4.0	7.7	1,000
4	**PNIRP-04V-S**	6.0	9.7	1,000
5	**PNIRP-05V-S**	8.0	11.7	1,000
6	**PNIRP-06V-S**	10.0	13.7	1,000
8	**PNIRP-08V-S**	14.0	17.7	1,000
10	**PNIRP-10V-S**	18.0	21.7	1,000

Material and Finish
PBT (Glass-filled), UL94V-0, natural (white)

RoHS2 compliance

Retainer

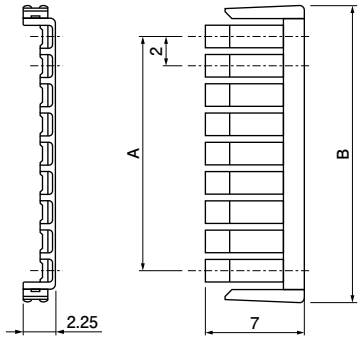

No. of circuits	Model No.	Dimensions (mm)		Q'ty/bag
		A	B	
2	**PNIS-02V**	—	6.3	1,000
3	**PNIS-03V**	4.0	8.3	1,000
4	**PNIS-04V**	6.0	10.3	1,000
5	**PNIS-05V**	8.0	12.3	1,000
6	**PNIS-06V**	10.0	14.3	1,000
8	**PNIS-08V**	14.0	18.3	1,000
10	**PNIS-10V**	18.0	22.3	1,000

Material and Finish
PA 66 (Glass-filled), UL94V-0, natural (ivory)

RoHS2 compliance