RPZ CONNECTOR

Wire-to-Wire connectors

Power supply circuit and signal circuit integrated hybrid type drawer connector.

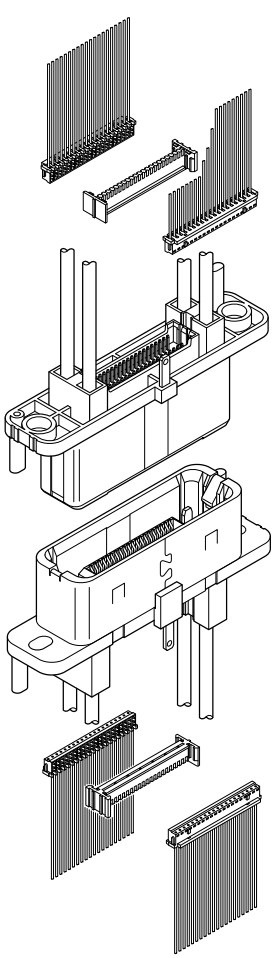

Features

- **High durability**
  The contacts are bellows type, thus the connector is guaranteed for 20,000 mating cycles.
- **ESD shielding**
  Both plug and receptacle have the ESD shielding shell.
- **Grounding device**
  For the grounding purpose, #110 tab is equipped with this connector.

■ Specifications

- Current rating: Signal circuit: 1.0 A AC/DC (AWG #26)
  Power supply circuit: 15 A AC/DC (AWG #14)
- Voltage rating: Signal circuit: 50 V AC/DC
  Power supply circuit: 250 V AC/DC
- Temperature range: -25℃ to +85℃
  (including temperature rise in applying electrical current)
- Contact resistance:
  Signal circuit: Initial value/40 mΩ max.
  After environmental testing/60 mΩ max.
  Power supply circuit: Initial value/10 mΩ max.
  After environmental testing/20 mΩ max.
- Insulation resistance: 500 MΩ min.
- Withstanding voltage:
  Power-Signal: 3,000 V AC/minute
  Power-Grounding: 1,500 V AC/minute
  Power-Shell: 1,500 V AC/minute
- Applicable wire range:
  Conductor size/ Power supply circuit: AWG #24 to #14
  Tab (PS connector): AWG #24 to #16
  Insulation O.D./Power supply circuit: ϕ1.4 to ϕ3.6 mm
  Tab (When PS connector is applied.): ϕ1.0 to ϕ3.4 mm
- Guarantee of repeated mating/unmating performance: 20000 cycles

* Please refer to the "Handling Precautions for Terminals and Connectors" on our website (listed in the "Technical Documents" column on the Product Information page) before use.
* RoHS2 compliance
* Dimensional unit: mm
* Contact JST for details.

■ Standard

For information on overseas standard registrations, please refer to the "List of Registered Overseas Standards" on our website (listed in the "Technical Documents" column on the Product Information page).
※The general specifications mentioned above are defined in the product specifications for this series. Please note that registered standards may differ.

Power supply circuit contact plug

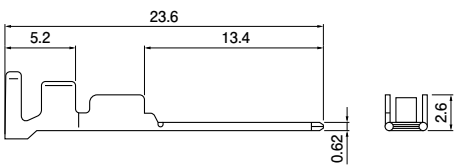

Model No.	Applicable wire range		Insulation O.D. (mm)	Q'ty / reel
	mm²	AWG #		
SRPM-61GG-P0.6	0.75 to 2.0	18 to 14	2.0 to 3.6	3,000
SRPM-01GG-P0.6	0.2 to 0.5	24 to 20	1.4 to 1.9	4,000

Material and Surface finish, etc.
Copper alloy, nickel-undercoated, selective gold-plated, tin-plated

RoHS2 compliance This product displays (LF)(SN) on a label.

Power supply circuit contact receptacle

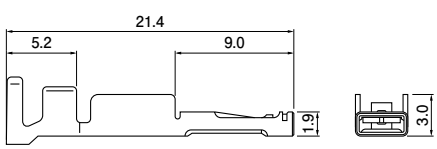

Model No.	Applicable wire range		Insulation O.D. (mm)	Q'ty / reel
	mm²	AWG #		
SRPF-61GG-P0.6	0.75 to 2.0	18 to 14	2.0 to 3.6	3,000
SRPF-01GG-P0.6	0.2 to 0.5	24 to 20	1.4 to 1.9	4,000

Material and Surface finish, etc.
Copper alloy, nickel-undercoated, gold-plated, tin-plated

RoHS2 compliance This product displays (LF)(SN) on a label.

Plug

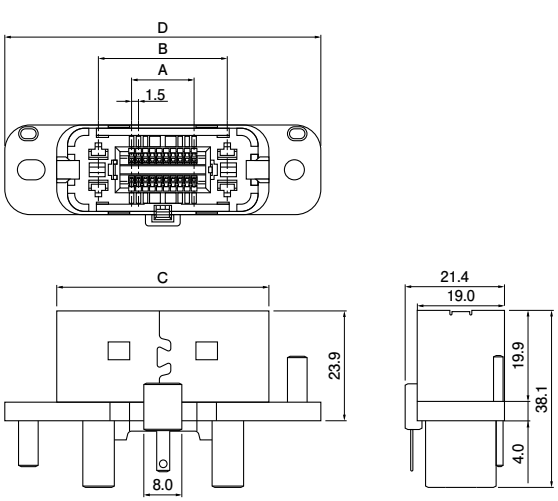

No. of circuits	Model No.	Dimensions (mm)							Q'ty/ box
		A	B	C	D	E	F	G	
20	**20P-RPZV-K4GG**	13.5	27.5	45.6	67.5	35.1	56.5	46.6	120
24	**24P-RPZV-K4GG**	16.5	30.5	48.6	70.5	38.1	59.5	49.6	120
26	**26P-RPZV-K4GG**	18.0	32.0	50.1	72.0	39.6	61.0	51.1	120
32	**32P-RPZV-K4GG**	22.5	36.5	54.6	76.5	44.1	65.5	55.6	120
40	**40P-RPZV-K4GG**	28.5	42.5	60.6	82.5	50.1	71.5	61.6	120

Material and Surface finish, etc.
Contact: Copper alloy, nickel-undercoated, selective gold- plated, tin-plated Housing: Thermoplastic resin Tab: Copper alloy, nickel-plated Shell: Copper alloy, nickel-plated

RoHS2 compliance This product displays (LF)(SN) on a label.

※ For flame retardant grade of resin material used, please refer to the "List of Registered Overseas Standards" on our website (listed in the "Technical Documents" column on the Product Information page).

Receptacle

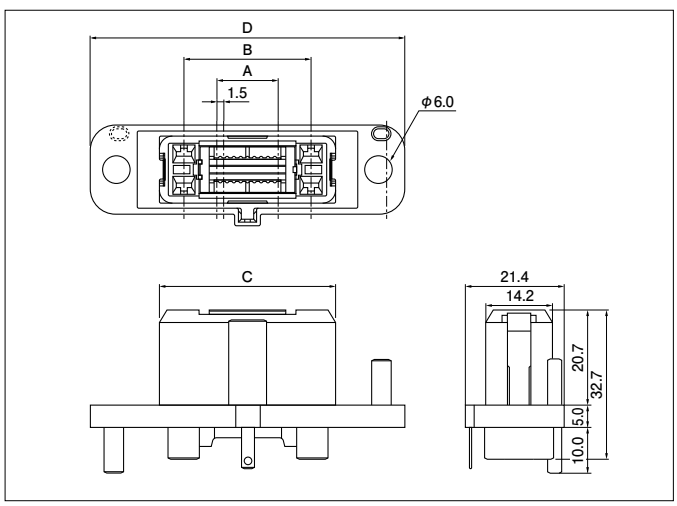

No. of circuits	Model No.	Dimensions (mm)							Q'ty/ box
		A	B	C	D	E	F	G	
20	20R-RPZV-K2GG	13.5	27.5	37.5	69.5	49.6	58.5	40.5	120
24	24R-RPZV-K2GG	16.5	30.5	40.5	72.5	52.6	61.5	43.5	120
26	26R-RPZV-K2GG	18.0	32.0	42.0	74.0	54.1	63.0	45.0	120
32	32R-RPZV-K2GG	22.5	36.5	46.5	78.5	58.6	67.5	49.5	120
40	40R-RPZV-K2GG	28.5	42.5	52.5	84.5	64.6	73.5	55.5	120

Material and Surface finish, etc.

Contact: Copper alloy, nickel-undercoated, selective gold- plated, tin-plated
Housing: Thermoplastic resin
Shell: Copper alloy, nickel-plated

RoHS2 compliance This product displays (LF)(SN) on a label.

※ For flame retardant grade of resin material used, please refer to the "List of Registered Overseas Standards" on our website (listed in the "Technical Documents" column on the Product Information page).

CZ connector socket

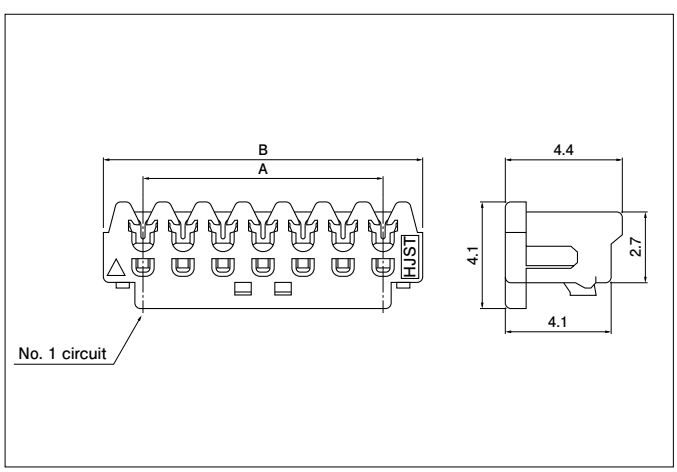

No of circuits	Model No.	Dimensions (mm)		Q'ty / box
		A	B	
10	**10CZ-6H**	13.5	16.5	1,000
12	**12CZ-6H**	16.5	19.5	1,000
13	**13CZ-6H**	18.0	21.0	1,000
16	**16CZ-6H**	22.5	25.5	1,000
20	**20CZ-6H**	28.5	31.5	1,000

Material and Surface finish, etc.

Contact: Copper alloy, tin-plated
Housing: Thermoplastic resin, natural

RoHS2 compliance

※ For flame retardant grade of resin material used, please refer to the "List of Registered Overseas Standards" on our website (listed in the "Technical Documents" column on the Product Information page).

CZW connector socket holder

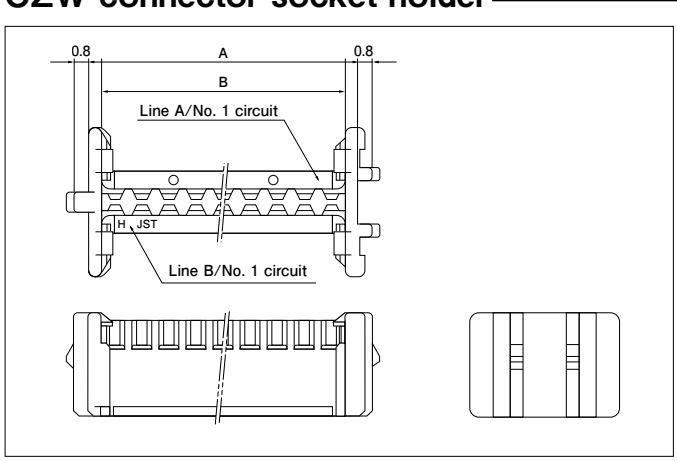

No. of circuits	Model No.	Dimensions (mm)		Q'ty / box
		A	B	
20	**CZWH-20-S**	17.9	16.5	1,000
24	**CZWH-24-S**	20.9	19.5	1,000
26	**CZWH-26-S**	22.4	21.0	1,000
32	**CZWH-32-S**	26.9	25.5	1,000
40	**CZWH-40-S**	32.9	31.5	1,000

Material and Surface finish, etc.

Thermoplastic resin, natural

RoHS2 compliance

※ For flame retardant grade of resin material used, please refer to the "List of Registered Overseas Standards" on our website (listed in the "Technical Documents" column on the Product Information page).

PS contact

SPS-01T-110

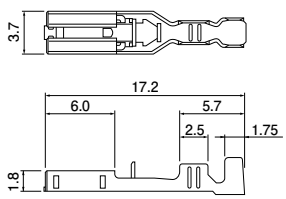

SPS-41T-110

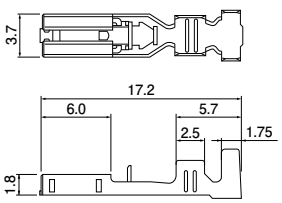

Model No.	Applicable wire range		Insulation O.D. (mm)	Q'ty / reel
	mm²	AWG #		
SPS-01T-110	0.21 to 0.5	24 to 20	1.0 to 2.5	10,000
SPS-41T-110	0.5 to 1.25	20 to 16	1.9 to 3.4	10,000

Material and Surface finish, etc.
Brass, tin-plated

RoHS2 compliance

PS housing

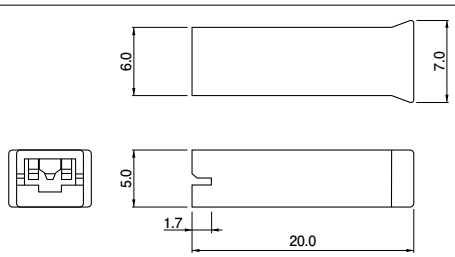

Model No.	Material and Surface finish, etc.	Q'ty / bag
PS-110	Thermoplastic resin, natural	1,000

RoHS2 compliance

※For flame retardant grade of resin material used, please refer to the "List of Registered Overseas Standards" on our website (listed in the "Technical Documents" column on the Product Information page).

Panel layout

Plug

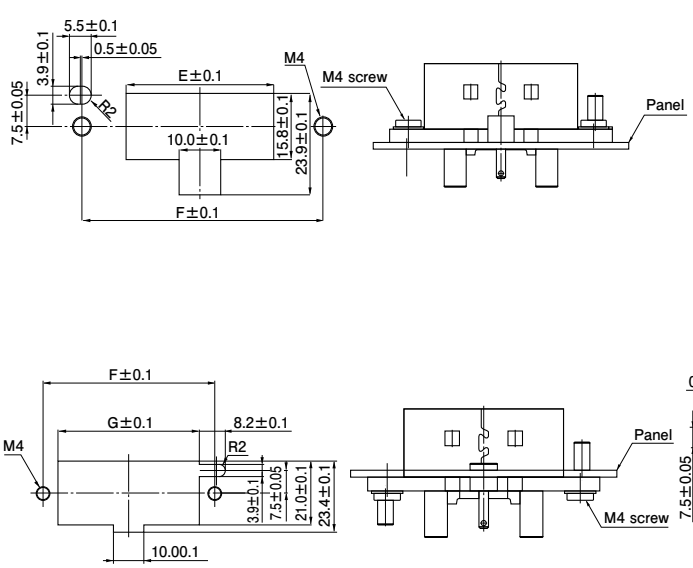

Receptacle

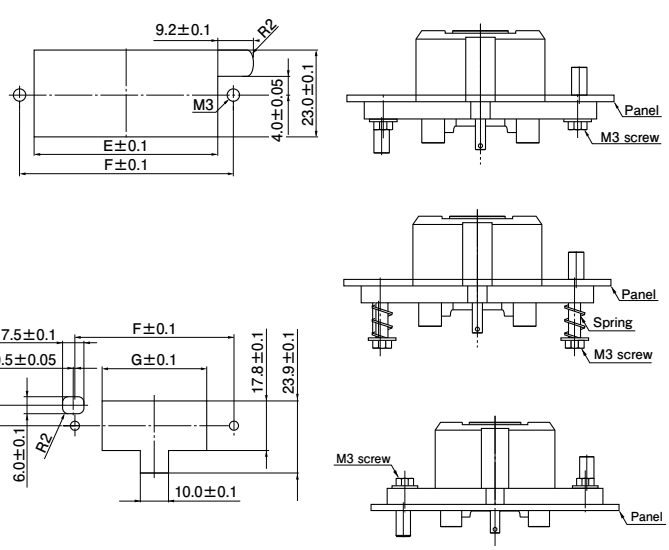

Note: 1. Reference layout when misalignment of the mating axis is to be absorbed.
2. Drill holes in the panel according to the sketch and table shown above. Burrs must be removed.
3. The strength of the panel must be considered when punching two or more holes.
4. The connector must be inserted from the same side as the hole is punched.

Assembly layout

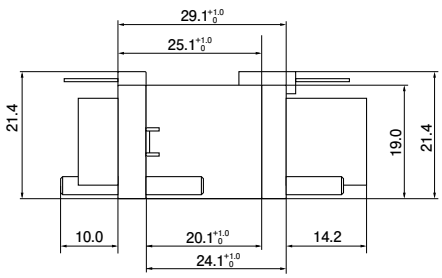

Crimping machine, Applicator

Contact	Crimping machine	Applicator		
		Crimp applicator	Dies	Crimp applicator with dies
SPS-01T-110	AP-K2N	MK-L-SPS	MK/SPS-01-110	APLMK SPS01-110
SPS-41T-110			MK/SPS-41-110	APLMK SPS41-110
SRPM-01GG-P0.6		MKS-L	MK/SRPF/M-01-06	APLMK SRPF/M01-06
SRPM-61GG-P0.6			MK/SRPF/M-61-06	APLMK SRPF/M61-06
SRPF-01GG-P0.6			MK/SRPF/M-01-06	APLMK SRPF/M01-06
SRPF-61GG-P0.6			MK/SRPF/M-61-06	APLMK SRPF/M61-06

Note: Contact JST for fully automatic crimping applicator.